Dimension Drawing - Ekrano GX	
BPP900480100	Ekrano GX

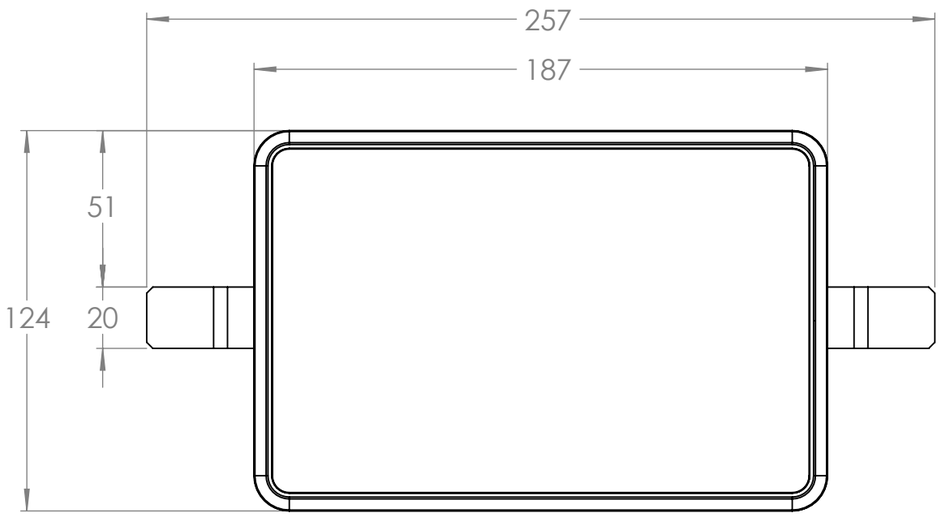

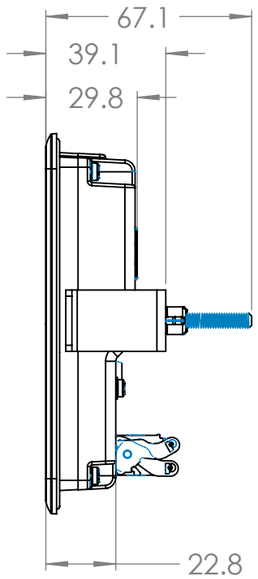

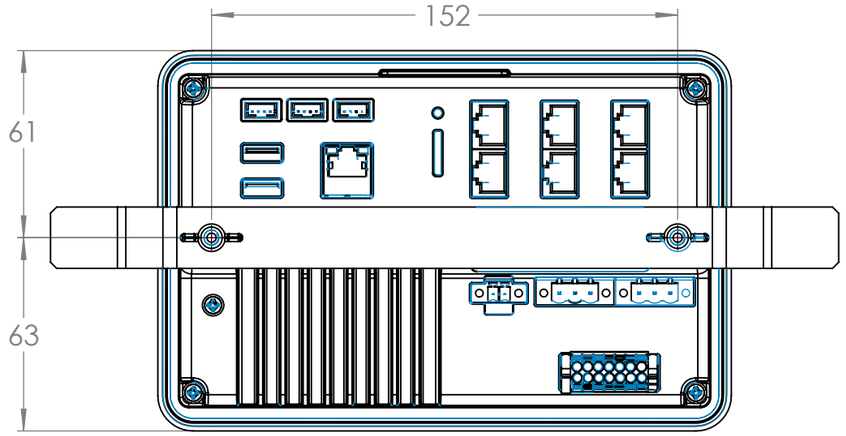

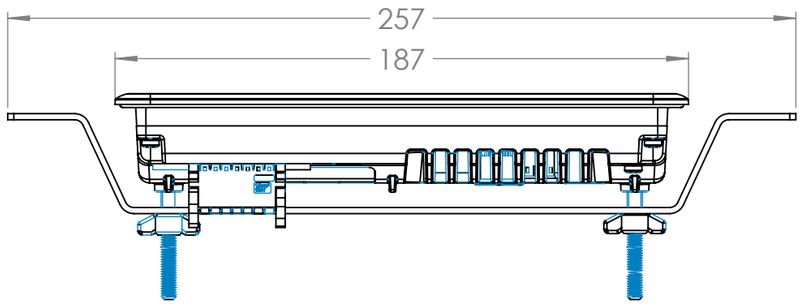

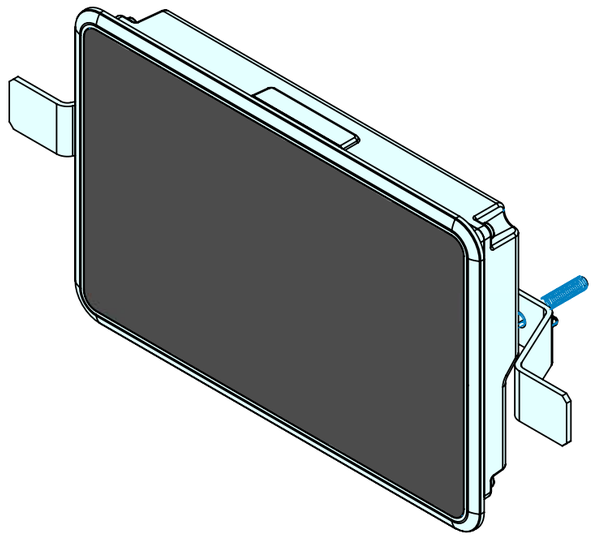

Dimensions in mm

victron energy
BLUE POWER

Rev00